~ NOTES ~

(100) DIMENSIONS ARE MEASURED TO THE CENTER OF THE GUARDRAIL POSTS.

ON THE PLAN SHEETS, THE DESIGNER MUST INCLUDE THE STATION AND OFFSET MEASUREMENTS FOR THE CENTER OF THE GUARDRAIL POSTS OF THE BULLNOSE. REFER TO SHEET 3 FOR DETAILS.

REFER TO DETAIL A FOR MORE INFORMATION.

(101) U-BOLT CABLE CLIPS (3 PER CABLE) SPACED OUT ON NOSE, TO HOLD CABLE TO BACKSIDE OF THE RAIL.

(102) NOSE CABLE WITH SWAGGED END BUTTONS.

(103) NOSE CABLE ANCHOR PLATE (BACKSIDE OF SPLICE).

(104) THE SLACK IN THE NOSE CABLES SHALL BE EVENLY DISTRIBUTED BETWEEN THE CABLE CLIP FASTENERS AND POST NO. 1 ON EITHER SIDE OF THE NOSE.

(105) MINIMUM WORKING WIDTH 4'-2".
GRADING INSIDE THE THRIE BEAM TERMINAL BEYOND POST 13 MAY BE ADJUSTED FOR DRAINAGE, PROVIDED THERE IS A MINIMUM OF 2 FEET OF FILL BEHIND THE POSTS TO ENSURE ADEQUATE SUPPORT FOR THE SYSTEM.

(106) MINIMUM WIDTH OF SYSTEM IS 14' - 9¼" MEASURED FROM FACE OF GUARDRAIL TO FACE OF GUARDRAIL.

(107) FIXED OBJECT OR OTHER OBSTACLE.

108 PARTS E1 THROUGH E4 ARE THRIE BEAM RAILS. SEE SHEET 8 FOR DETAILS.

- E1 UNBENT STANDARD THRIE BEAM RAIL (POST 8 AND BEYOND)
- E2 SLOTTED THRIE BEAM RAIL (POST 1B TO POST 1A)
- E3 SLOTTED THRIE BEAM RAIL (POST 5 TO POST 8)
- E4 SLOTTED THRIE BEAM RAIL (POST 1 TO POST 5)

(109) BEYOND POST 12 - CAN CONSTRUCT W-BEAM GUARDRAIL OR THRIE BEAM GUARDRAIL. FOR W-BEAM INSTALLATIONS, TRANSITION THE RAIL FROM POST 12 TO 13 BY USING A THRIE BEAM CONNECTOR (INCIDENTAL TO THE BULLNOSE TERMINAL BID ITEM) FOLLOWED BY A STANDARD POST AND BLOCK, SPACED AT 3' - 1½". CONTINUE BARRIER SYSTEM WITH STANDARD 6' - 3" POST SPACING, AND TRANSITION THE BULLNOSE RAIL HEIGHT TO 31" OVER A 12' -6" BEAM LENGTH. FOR ADDITIONAL DETAILS SEE RBR-001, RBR-005 AND THE DETAIL ON SHEET 2.

FOR THRIE BEAM INSTALLATIONS BEYOND POST 12, TRANSITION THE BULLNOSE RAIL HEIGHT TO 33" OVER A 12' - 6" BEAM LENGTH.

110 SEE SHEET 5 FOR DETAILS ON THE INSTALLATION OF DELINEATOR REFLECTORS.

111 SEE SHEET 4 FOR MEDIAN GRADING.

112 THRIE BEAM RAILS MAY NEED TO BE FIELD BENT TO FIT THE LOCATION.

113 IF ROCK IS ENCOUNTERED, REMOVE ROCK TO FULL DEPTH OF POST PLUS 2 1/2". MINIMUM DIAMETER OF THE ROCK REMOVAL IS 12" DIAMETER.

114 SEE SHEET 3 FOR INSTALLATION LAYOUT DETAILS OF THE BULLNOSE TERMINAL.

LAPPING DETAIL

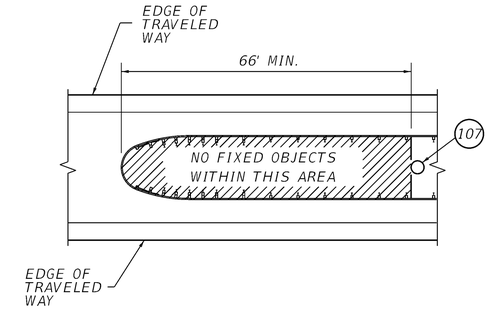

OBSTACLE FREE AREA INSIDE BULLNOSE

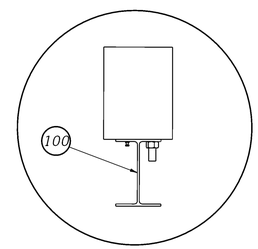

DETAIL A

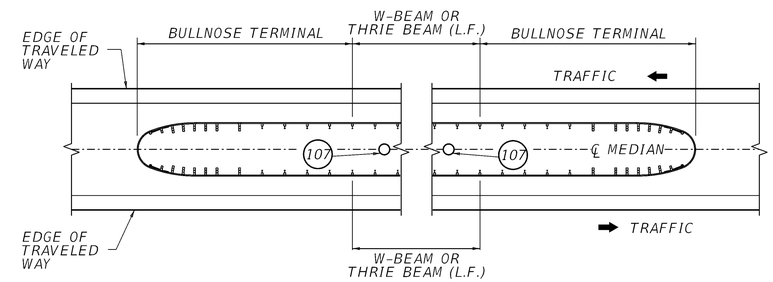

MEDIAN FIXED OBJECT SHIELDING PAY LIMITS

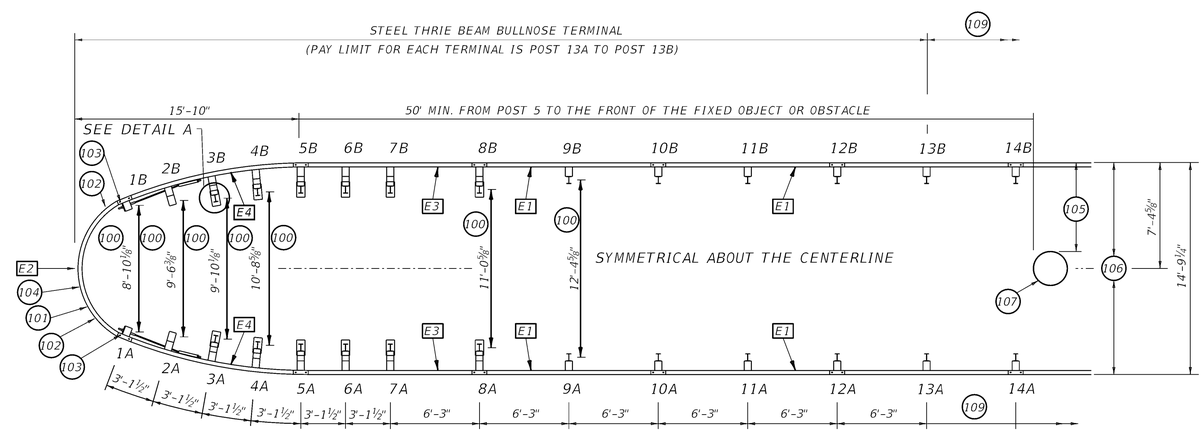

PLAN VIEW
TYPICAL BULLNOSE LAYOUT

REVISION DATE: 12.10.2024
REVISION NUMBER: 0

SUBMITTED ____ DIVISION DIRECTOR ____ DATE
APPROVED ____ STATE HIGHWAY ENGINEER ____ DATE

BARRIERS

COMMONWEALTH OF KENTUCKY
DEPARTMENT OF HIGHWAYS
TEAM KENTUCKY TRANSPORTATION CABINET

STEEL THRIE BEAM BULLNOSE TERMINAL

SHEET 001: SYMMETRICAL BULLNOSE

SEPIA NUMBER
SEPIA 095

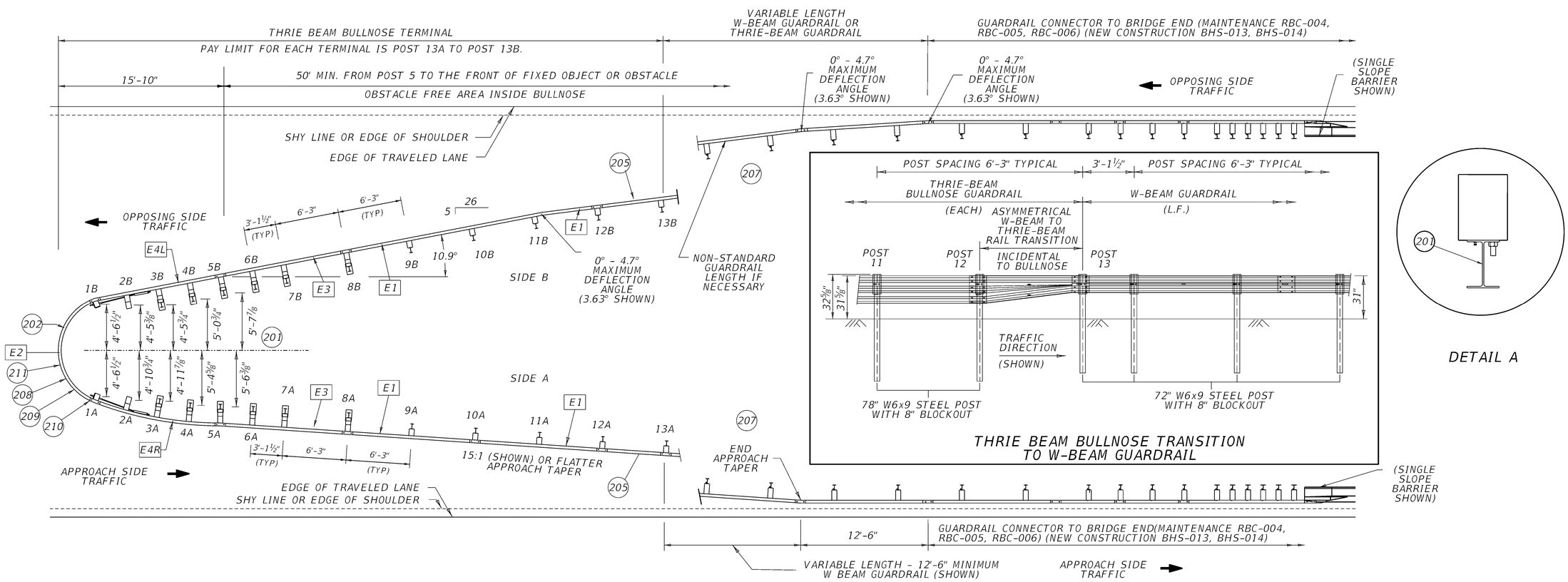

TYPICAL LAYOUT FOR ASYMMETRICAL BULLNOSE FOR SYSTEM WIDTHS GREATER THAN 24'

~ NOTES ~

201 DIMENSIONS ARE MEASURED FROM THE GUARDRAIL CENTER OF POSTS TO THE SYMMETRY LINE OF SLOTTED THRIE BEAM RAIL E2.

ON THE PLAN SHEETS, THE DESIGNER MUST INCLUDE THE STATION AND OFFSET MEASUREMENTS FOR THE CENTER OF THE GUARDRAIL POSTS OF THE BULLNOSE. REFER TO SHEET 3 FOR DETAILS.

REFER TO DETAIL A FOR MORE INFORMATION.

202 BEND THE RAIL IN THE FIELD AS NEEDED TO MAKE CONNECTIONS. THE MAXIMUM DEFLECTION ANGLE IS 4.7° (3.63° SHOWN).

203 SAW, DRILL, OR PUNCH THE RAIL AS REQUIRED. DO NOT TORCH-CUT. REPAIR GALVANIZED COATINGS IN ACCORDANCE WITH ASTM A780 (THIS IS INCIDENTAL). SPACING BETWEEN INDIVIDUAL POSTS FROM POST 1 TO POST 7 IS 3'-1½"

204 PARTS E1 THROUGH E4 ARE THRIE BEAM RAILS. SEE SHEET 8 FOR DETAILS.

- E1 UNBENT STANDARD THRIE BEAM RAIL (POST 8 AND BEYOND)
- E2 SLOTTED THRIE BEAM RAIL (POST 1B TO POST 1A)
- E3 SLOTTED THRIE BEAM RAIL (POST 5 TO POST 8)
- E4 SLOTTED THRIE BEAM RAIL (POST 1 TO POST 5) WITH A RADIAL OPTION ON THE APPROACH SIDE AND A TANGENT OPTION ON THE OPPOSING SIDE.

205 BEYOND POST 12 - CAN CONSTRUCT W-BEAM GUARDRAIL OR THRIE BEAM GUARDRAIL. FOR W-BEAM INSTALLATIONS, TRANSITION THE RAIL FROM POST 12 TO 13 BY USING A THRIE BEAM CONNECTOR (INCIDENTAL TO THE BULLNOSE TERMINAL BID ITEM) FOLLOWED BY A STANDARD POST AND BLOCK, SPACED AT 3' - 1½". CONTINUE BARRIER SYSTEM WITH STANDARD 6' - 3" POST SPACING, AND TRANSITION THE BULLNOSE RAIL HEIGHT TO 31" OVER A 12' - 6" BEAM. FOR ADDITIONAL DETAILS SEE RBR-001, RBR-005 AND THE DETAIL ABOVE.

FOR THRIE BEAM INSTALLATIONS BEYOND POST 12, TRANSITION THE BULLNOSE RAIL HEIGHT TO 33" OVER A 12' - 6" BEAM LENGTH.

206 SEE SHEET 4 FOR MEDIAN GRADING.

207 MINIMUM WORKING WIDTH 4'-2".
GRADING INSIDE THE THRIE BEAM TERMINAL BEYOND POST 13 MAY BE ADJUSTED FOR DRAINAGE, PROVIDED THERE IS A MINIMUM OF 2 FEET OF FILL BEHIND THE POSTS TO ENSURE ADEQUATE SUPPORT FOR THE SYSTEM.

208 U-BOLT CABLE CLIPS (3 PER CABLE) SPACED OUT ON NOSE, TO HOLD CABLE TO BACKSIDE OF THE RAIL.

209 NOSE CABLE WITH SWAGGED END BUTTONS.

210 NOSE CABLE ANCHOR PLATE (BACKSIDE OF SPLICE).

211 THE SLACK IN THE NOSE CABLES SHALL BE EVENLY DISTRIBUTED BETWEEN THE CABLE CLIP FASTENERS AND POST NO. 1 ON EITHER SIDE OF THE NOSE.

212 FOR MEDIANS WIDER THAN 24', TAPER THE OPPOSING SIDE BEFORE TAPERING THE APPROACH SIDE, AS SHOWN.

213 EXTEND THE RAIL BEYOND POST 12 AT A TAPER RATE OF 15:1 OR FLATTER, AS NEEDED. THE REQUIRED EXTENSION LENGTH WILL DEPEND ON THE MEDIAN WIDTH OR THE WORKING WIDTH REQUIREMENTS.

214 IF ROCK IS ENCOUNTERED, REMOVE ROCK TO FULL DEPTH OF POST PLUS 2 ½". MINIMUM DIAMETER OF THE ROCK REMOVAL IS 12" DIAMETER.

215 SEE SHEET 5 FOR DETAILS ON THE INSTALLATION OF DELINEATOR REFLECTORS.

216 SEE SHEET 3 FOR INSTALLATION LAYOUT DETAILS OF THE BULLNOSE TERMINAL.

REVISION DATE: 12.10.2024
REVISION NUMBER: 0

SUBMITTED ____ DIVISION DIRECTOR ____ DATE
APPROVED ____ STATE HIGHWAY ENGINEER ____ DATE

BARRIERS

COMMONWEALTH OF KENTUCKY
DEPARTMENT OF HIGHWAYS
TEAM KENTUCKY TRANSPORTATION CABINET

STEEL THRIE BEAM BULLNOSE TERMINAL

SHEET 002: ASYMMETRICAL BULLNOSE

SEPIA NUMBER
SEPIA 095

BULLNOSE TERMINAL INSTALLATION LAYOUT

SYMMETRICAL BULLNOSE POST COORDINATES

POST NUMBER	X (301)	Y (301)	ANGLE OF POST (FLANGE FACE) (303)
13A	0	0	0
12A	6'-3"	0	0
11A	12'-6"	0	0
10A	18'-9"	0	0
9A	25'-0"	0	0
8A	31'-3"	0'-8"	0
7A	37'-6"	0'-8"	0
6A	40'-7 ½"	0'-8"	0
(300) 5A	43'-9"	0'-8"	0
4A	46'-9 ¼"	0'-10"	5
3A	49'-8 ⅝"	1'-3 ¼"	10
2A	52'-9 ¼"	1'-5 ⅛"	16
1A	55'-10 ½"	1'-9 ¼"	21
1B	55'-10 ½"	10'-7 ⅜"	21
2B	52'-9 ¼"	10'-11 ⅝"	16
3B	49'-8 ⅝"	11'-1 ⅜"	10
4B	46'-9 ¼"	11'-6 ⅝"	5
(300) 5B	43'-9"	11'-8 ⅝"	0
6B	40'-7 ½"	11'-8 ⅝"	0
7B	37'-6"	11'-8 ⅝"	0
8B	31'-3"	11'-8 ⅝"	0
9B	25'-0"	12'-4 ⅝"	0
10B	18'-9"	12'-4 ⅝"	0
11B	12'-6"	12'-4 ⅝"	0
12B	6'-3"	12'-4 ⅝"	0
13B	0	12'-4 ⅝"	0

ASYMMETRICAL BULLNOSE POST COORDINATES

POST NUMBER	X (301)	Y (301)	ANGLE OF POST (FLANGE FACE) (304)
13A	0	0	3.8
12A	6'-2 ⅞"	0'-5"	3.8
11A	12'-5 ¾"	0'-10"	3.8
10A	18'-8 ½"	1'-3"	3.8
9A	24'-11 ⅜"	1'-8"	3.8
8A	31'-1 ⅝"	2'-9"	3.8
7A	37'-4 ½"	3'-1 ⅞"	3.8
6A	40'-5 ⅞"	3'-4 ⅜"	3.8
(300) 5A	43'-8 ½"	3'-7"	0
4A	46'-8 ¼"	3'-8 ⅝"	5
3A	49'-8 ¼"	4'-1 ½"	10
2A	52'-8 ¾"	4'-2 ⅝"	16
1A	55'-10 ⅛"	4'-6 ⅞"	21
1B	55'-10 ⅛"	13'-7 ¾"	21
2B	52'-8 ⅝"	13'-6 ⅝"	10.9
3B	49'-6"	13'-7"	10.9
4B	46'-5 ⅛"	14'-2"	10.9
(300) 5B	43'-4 ⅜"	14'-9 ⅛"	10.9
6B	40'-3 ½"	15'-4 ¼"	10.9
7B	37'-2 ¾"	15'-11 ⅜"	10.9
8B	31'-1"	17'-1 ½"	10.9
9B	25'-0 ⅞"	18'-11 ½"	10.9
10B	18'-11 ¼"	20'-1 ¾"	10.9
11B	12'-9 ⅝"	21'-3 ⅞"	10.9
12B	6'-7 ¾"	22'-6"	10.9
13B	0'-6"	23'-8 ¼"	10.9

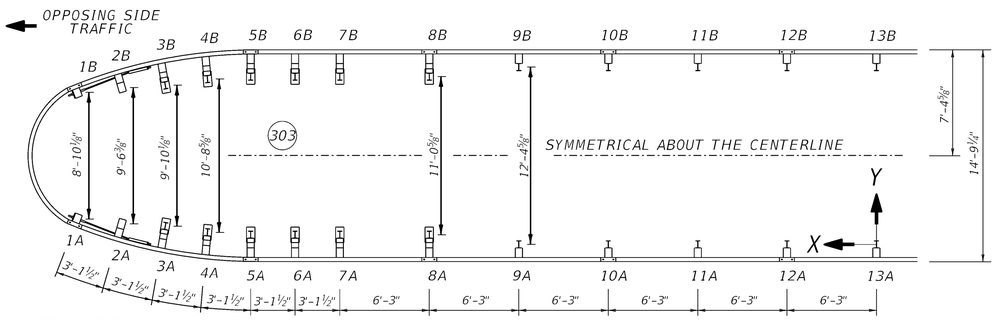

SYMMETRICAL BULLNOSE LAYOUT

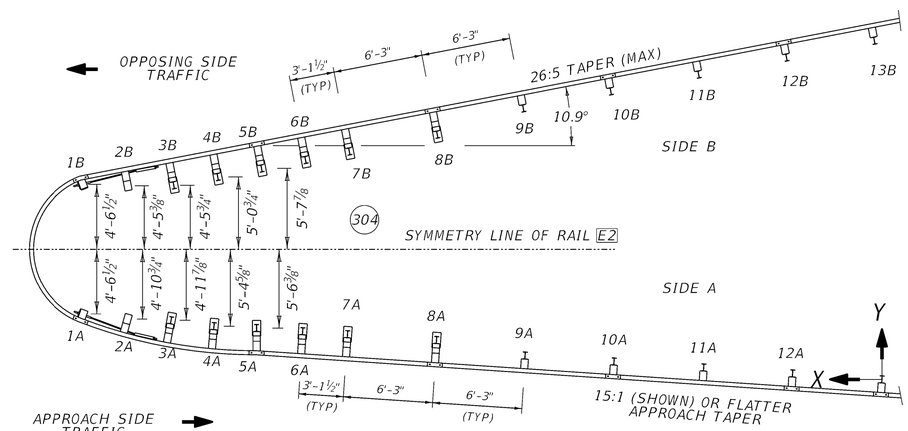

ASYMMETRICAL BULLNOSE LAYOUT

~ NOTES ~

(300) MINIMUM DISTANCE REQUIREMENT: THE LENGTH FROM POST 5 TO THE FRONT OF THE FIXED OBJECT OR OBSTACLE MUST BE A MINIMUM OF 50'.

(301) DIMENSIONS ARE MEASURED TO THE CENTER OF GUARDRAIL POSTS. REFER TO DETAIL A FOR MORE INFORMATION. USE THE STATION AND OFFSET FOR POST 13A, AND REFER TO THE COORDINATES PROVIDED IN THE TABLE TO LAYOUT THE CENTER OF THE BULLNOSE GUARDRAIL POSTS.

302 ON THE PLAN SHEETS, THE DESIGNER MUST INCLUDE THE STATION AND OFFSET MEASUREMENTS FOR THE CENTER OF THE GUARDRAIL POSTS 1 THROUGH 13 FOR THE BULLNOSE.

(303) FOR THE SYMMETRIC BULLNOSE, LAYOUT AND ANGLE DIMENSIONS FOR POST 1-5 ARE MEASURED FROM THE CENTER OF THE POSTS ON SIDE A TO THE CENTER OF POSTS ON SIDE B.

(304) FOR THE ASYMMETRIC BULLNOSE, LAYOUT AND ANGLE DIMENSIONS FOR POST 1-5 ARE MEASURED FROM THE CENTER OF THE POSTS TO THE SYMMETRY LINE OF SLOTTED THRIE BEAM RAIL E2.

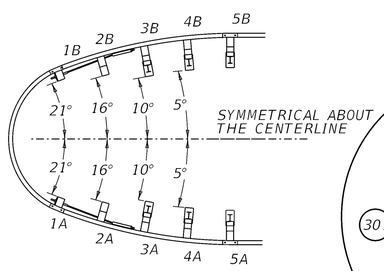

POST ANGLE

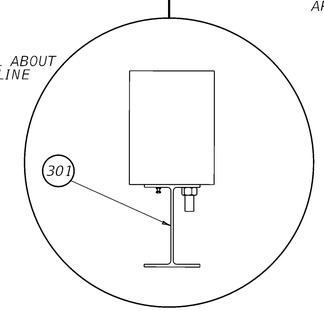

DETAIL A

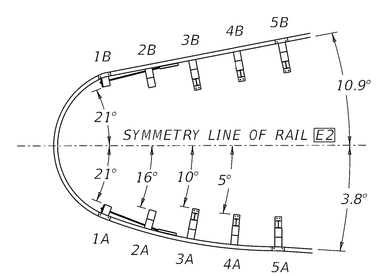

POST ANGLE

REVISION DATE: 2.24.2025
REVISION NUMBER: 1

SUBMITTED ____ DIVISION DIRECTOR ____ DATE

APPROVED ____ STATE HIGHWAY ENGINEER ____ DATE

BARRIERS

COMMONWEALTH OF KENTUCKY
DEPARTMENT OF HIGHWAYS
TEAM KENTUCKY TRANSPORTATION CABINET

STEEL THRIE BEAM BULLNOSE TERMINAL

SHEET 003: BULLNOSE TERMINAL INSTALLATION LAYOUT

SEPIA NUMBER
SEPIA 095

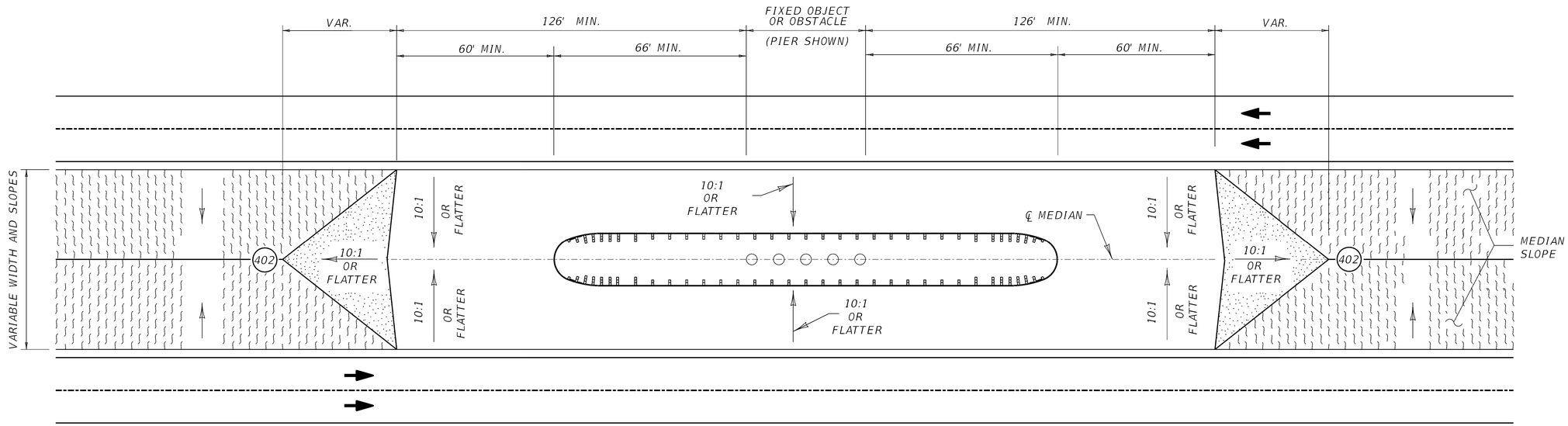

GRADING AT BULLNOSE

~ NOTES ~

400 MINIMUM WORKING WIDTH 4'-2".

GRADING FROM POST 1 TO POST 13 AND THE 60' LEADING OR TRAILING THE THRIE BEAM TERMINAL SHALL BE 10:1 OR FLATTER.

GRADING BEYOND POST 13 MAY BE ADJUSTED FOR DRAINAGE, PROVIDED THERE IS A MINIMUM OF 2 FEET OF FILL BEHIND THE POSTS TO ENSURE ADEQUATE SUPPORT FOR THE SYSTEM.

401 FIXED OBJECT OR OTHER OBSTACLE.

402 EVALUATE MEDIAN DRAINAGE AND ENSURE POSITIVE FLOW. INCLUDE A DROP BOX INLET AND PIPING AS NEEDED, AND ENSURE THAT ALL NECESSARY BID ITEMS ARE INCLUDED.

403 WHILE MEDIAN GRADING DETAIL DEPICTS SYMMETRICAL THRIE BEAM BULLNOSE TERMINAL, ALL GRADING REQUIREMENTS APPLY TO ASYMMETRICAL SITUATIONS ALSO.

404 GRADING QUANTITIES MUST BE CALCULATED AND SHOWN AS BID ITEMS.

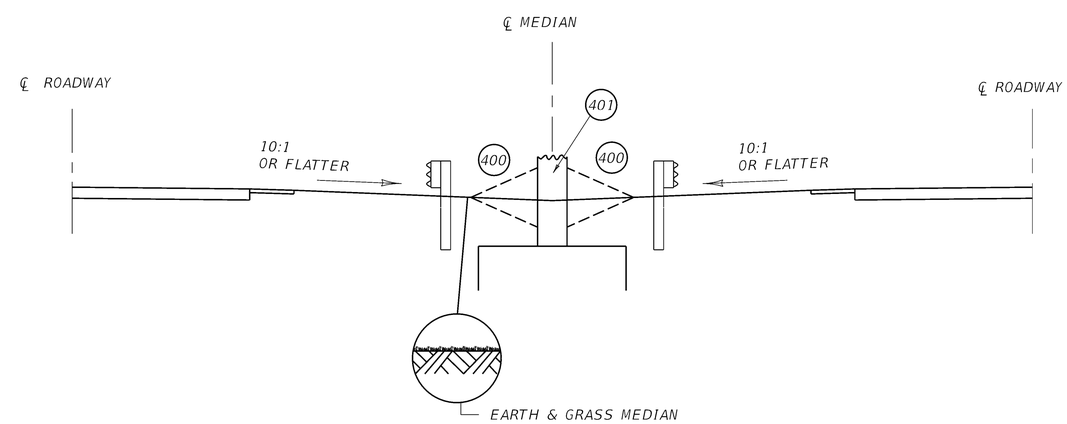

CROSS SECTION AT BULLNOSE

REVISION DATE: 2.24.2025
REVISION NUMBER: 1

SUBMITTED _____ DIVISION DIRECTOR _____ DATE

APPROVED _____ STATE HIGHWAY ENGINEER _____ DATE

BARRIERS

COMMONWEALTH OF KENTUCKY
DEPARTMENT OF HIGHWAYS
TEAM KENTUCKY TRANSPORTATION CABINET

STEEL THRIE BEAM BULLNOSE TERMINAL

SHEET 004: GRADING AT BULLNOSE

SEPIA NUMBER
SEPIA 095

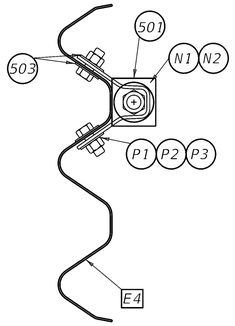

PROFILE VIEW

CABLE ANCHOR ASSEMBLY CONNECTION

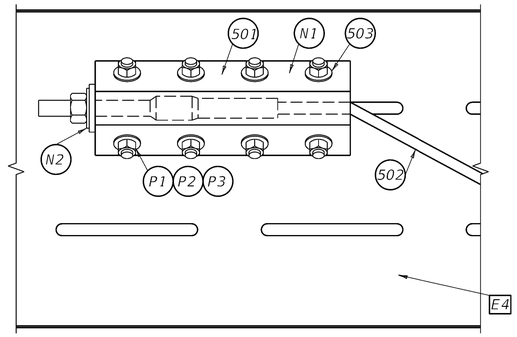

CABLE ANCHOR ASSEMBLY

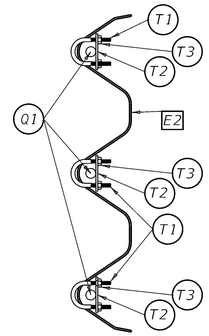

NOSE CABLE RETAINING CLIP

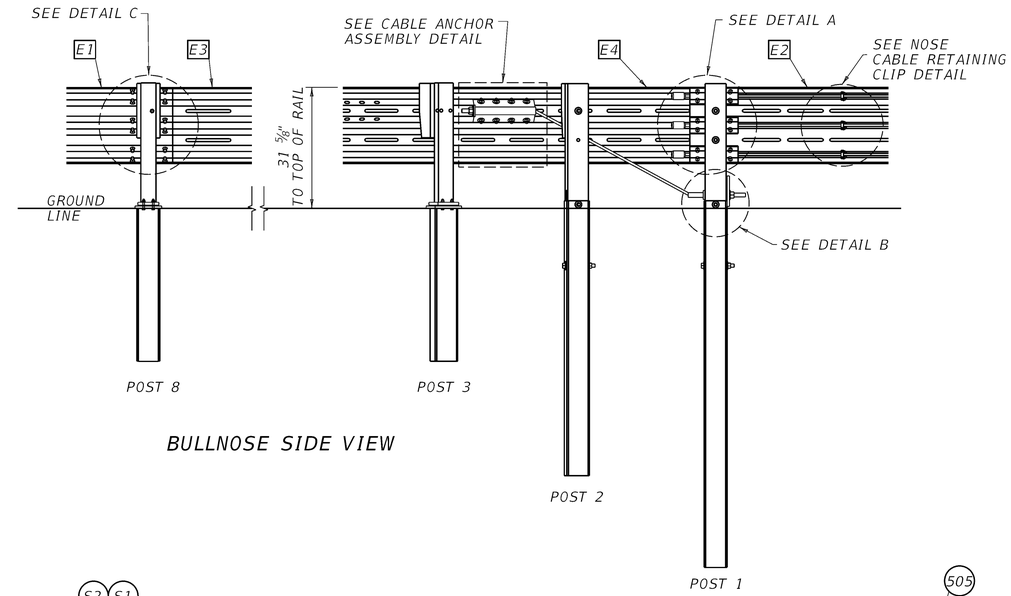

BULLNOSE SIDE VIEW

~ NOTES ~

500 SEE SHEET 10 FOR PART DESCRIPTIONS.

501 SEE ANCHOR BRACKET ASSEMBLY DETAIL ON SHEET 9.

502 SEE ANCHOR CABLE ASSEMBLY DETAIL ON SHEET 9.

503 ONE WASHER BETWEEN BOLT HEAD AND RAIL AND BETWEEN NUT AND ANCHOR BRACKET ASSEMBLY.

504 ONE WASHER BETWEEN BOLT HEAD AND FOUNDATION TUBE AND BETWEEN NUT AND FOUNDATION TUBE.

505 BEND TWO NAILS OVER THE BEARING PLATE TO PREVENT ROTATION.

506 NO MATERIAL IS TO BE PLACED AGAINST THE VERTICAL FACES OF BEARING PLATE.

507 PREVENT OR REMOVE MATERIALS THAT BLOCK ACCESS TO BOLTS FOR POST ASSEMBLIES.

508 THE COLOR OF DELINEATORS MUST MATCH THE COLOR OF THE EDGELINE THEY SUPPLEMENT.

509 DELINEATOR SPACING SHOULD BE 100' WITH A MINIMUM OF 3 REFLECTORS. THE FIRST DELINEATOR SHOULD BE PLACED ON POST 3, ON THE ADJACENT TRAFFIC SIDE OF THE BULLNOSE.

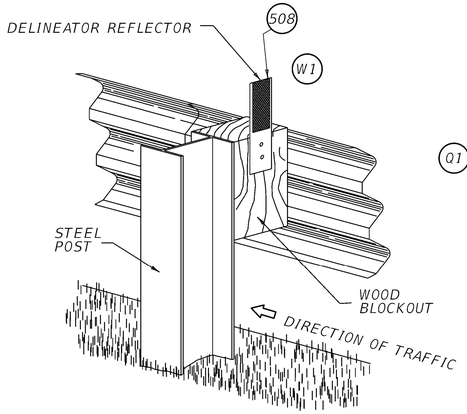

ONE SIDED REFLECTOR DETAIL AND TYPICAL INSTALLATION

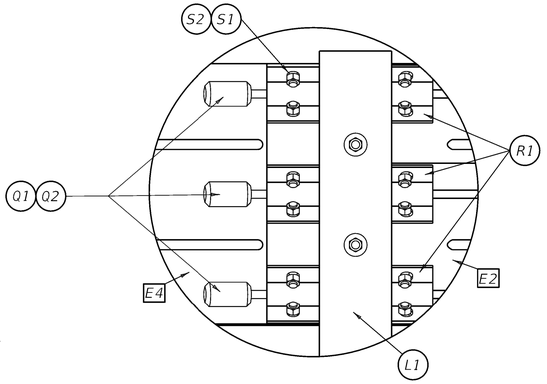

DETAIL A

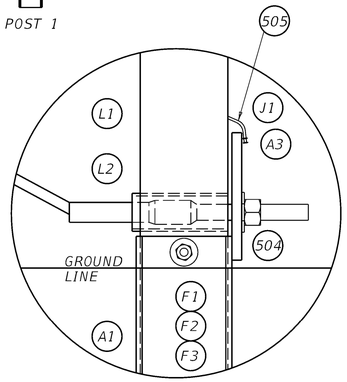

DETAIL B

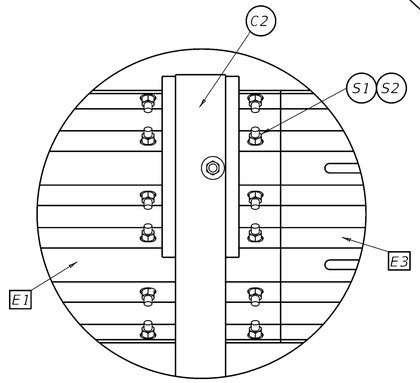

DETAIL C
THRIE BEAM SPLICE

REVISION DATE: 12.10.2024
REVISION NUMBER: 0

SUBMITTED ____ DIVISION DIRECTOR ____ DATE

APPROVED ____ STATE HIGHWAY ENGINEER ____ DATE

BARRIERS

COMMONWEALTH OF KENTUCKY
DEPARTMENT OF HIGHWAYS
TEAM KENTUCKY TRANSPORTATION CABINET

STEEL THRIE BEAM BULLNOSE TERMINAL

SHEET 005: NOSE AND ANCHOR DETAILS

SEPIA NUMBER
SEPIA 095

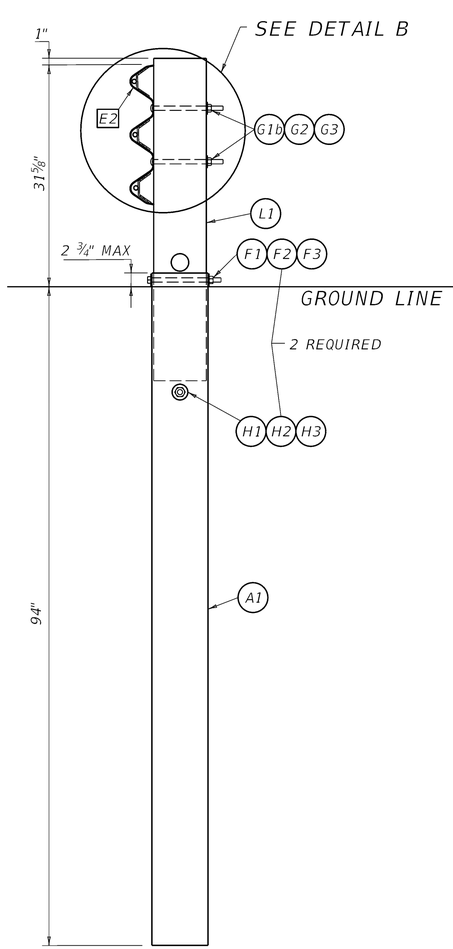

POST NO. 1

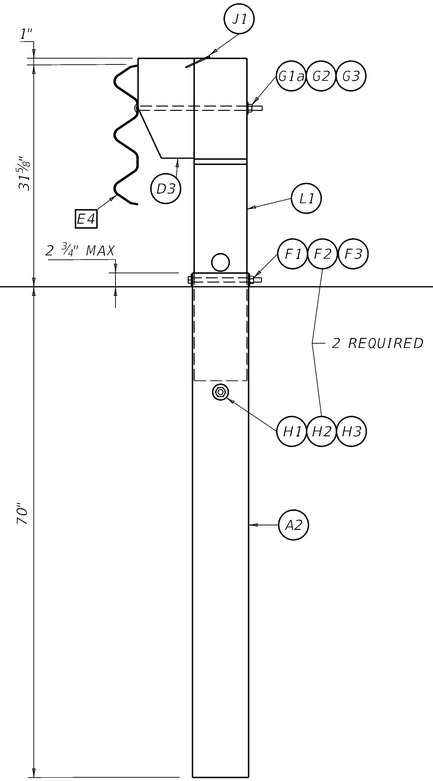

POST NO. 2

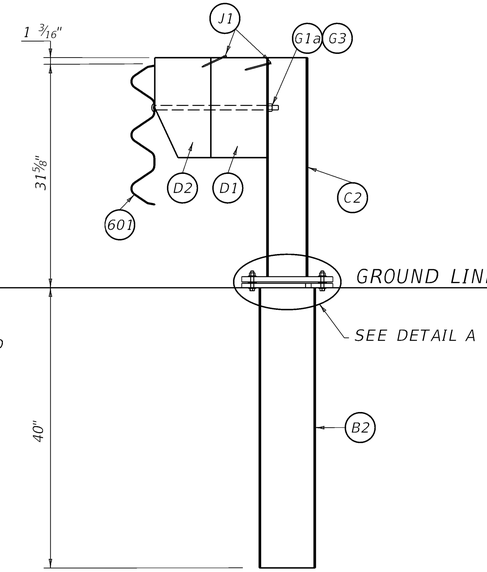

POST NOS. 3-8

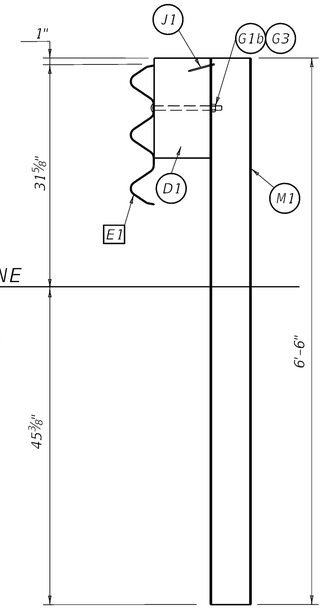

POST NOS. 9-13

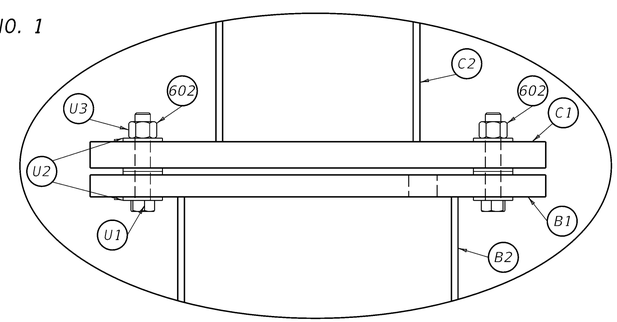

DETAIL A

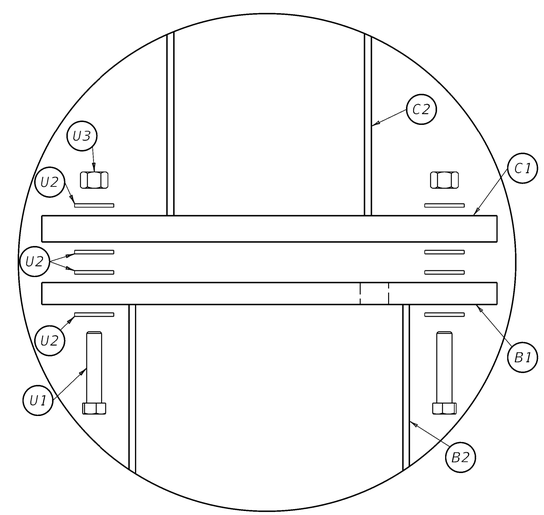

EXPLODED VIEW
DETAIL A

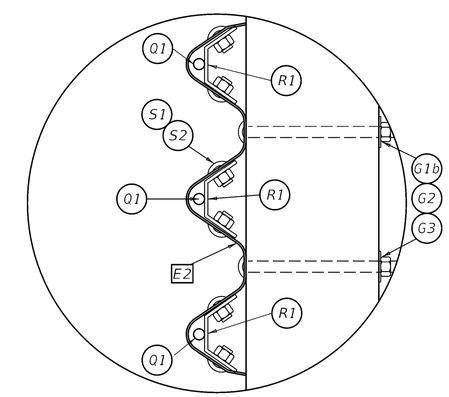

DETAIL B

~ NOTES ~

600 SEE SHEET 10 FOR PART DESCRIPTIONS.

601 RAIL CAN BE E3 OR E4 DEPENDING ON POST LOCATION.

602 TORQUE BOLT BETWEEN 60-75 FT-LB.

REVISION DATE: 12.10.2024
REVISION NUMBER: 0

SUBMITTED ____ DIVISION DIRECTOR ____ DATE

APPROVED ____ STATE HIGHWAY ENGINEER ____ DATE

BARRIERS

COMMONWEALTH OF KENTUCKY
DEPARTMENT OF HIGHWAYS
TEAM KENTUCKY TRANSPORTATION CABINET

STEEL THRIE BEAM BULLNOSE TERMINAL

SHEET 006: POST DETAILS

SEPIA NUMBER
SEPIA 095

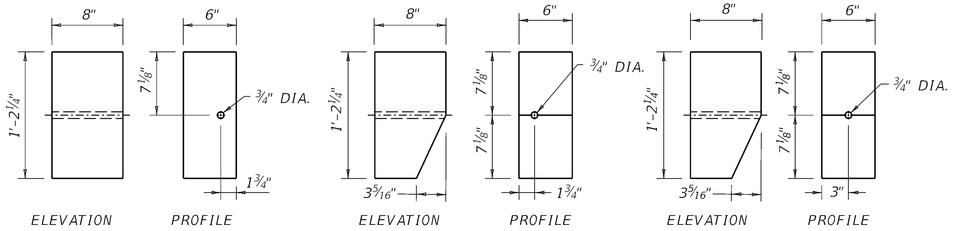

BLOCKOUT (D1) BLOCKOUT (D2) BLOCKOUT (D3)

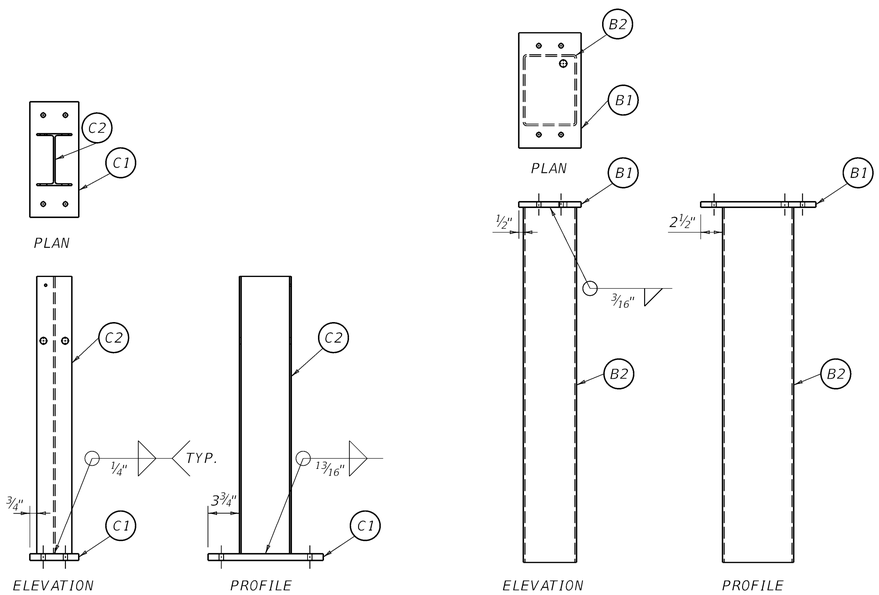

UPPER POST ASSEMBLY LOWER POST ASSEMBLY

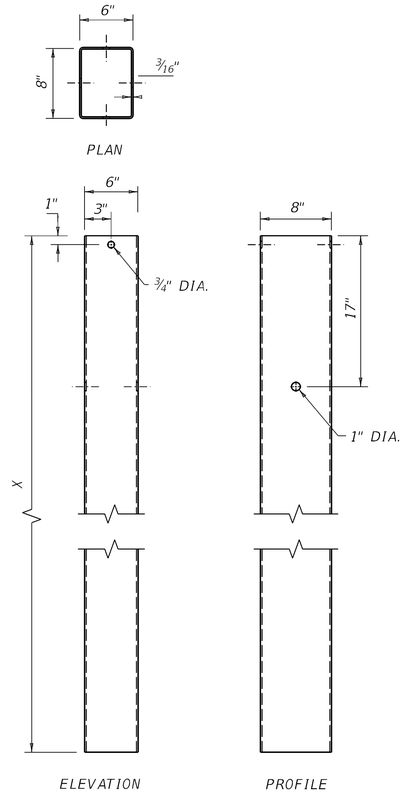

FOUNDATION TUBE (A1, A2, & B2)

PART	LENGTH "X"
A1	8' - 0"
A2	6' - 0"
B2	3' - 4"

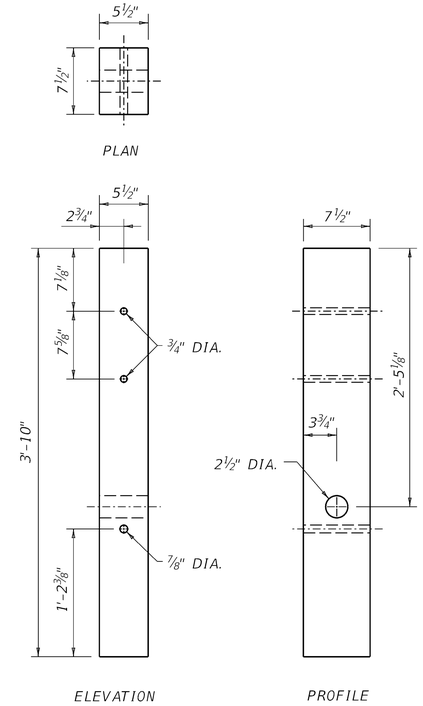

BCT POST (L1)

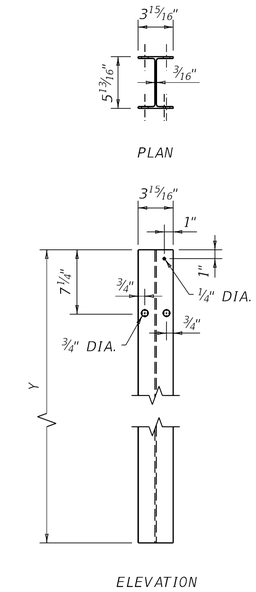

POST (M1 & C2)

PART	LENGTH "Y"
M1	6' - 6"
C2	2' - 7¼"

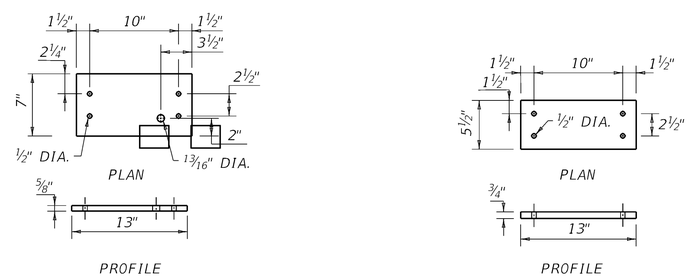

LOWER SHEAR PLATE (B1) UPPER SHEAR PLATE (C1)

~ NOTES ~

700 SEE SHEET 10 FOR PART DESCRIPTIONS.

REVISION DATE: 12.10.2024
REVISION NUMBER: 0

SUBMITTED ____ DIVISION DIRECTOR ____ DATE
APPROVED ____ STATE HIGHWAY ENGINEER ____ DATE

BARRIERS

COMMONWEALTH OF KENTUCKY
DEPARTMENT OF HIGHWAYS
TEAM KENTUCKY TRANSPORTATION CABINET

STEEL THRIE BEAM BULLNOSE TERMINAL

SHEET 007: POST, BLOCK, AND HARDWARE DETAILS

SEPIA NUMBER
SEPIA 095

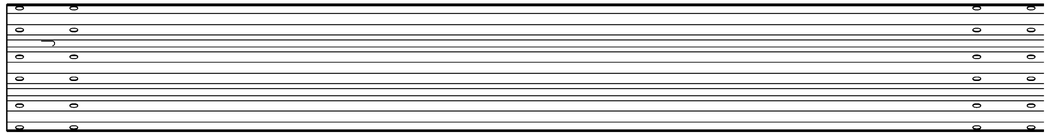

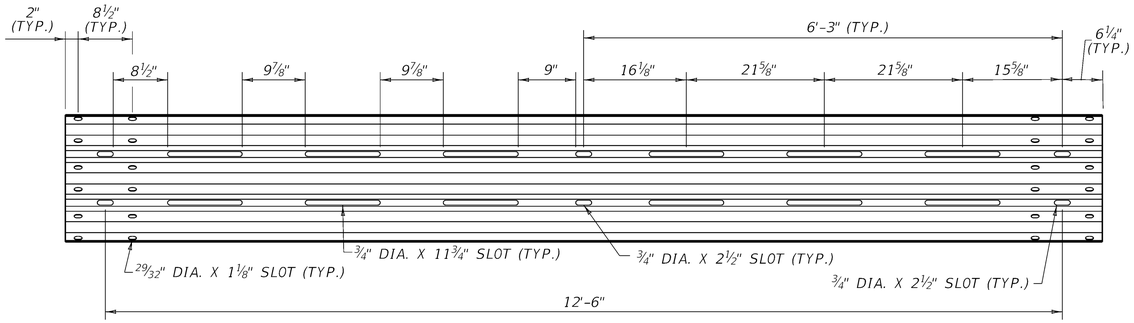

SLOTTED THRIE BEAM RAIL E1

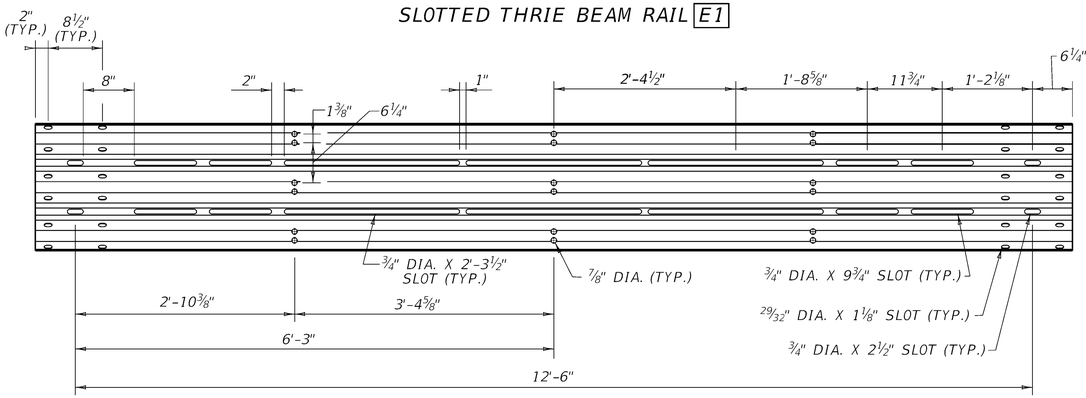

ELEVATION VIEW NON-RADIUSED

SLOTTED THRIE BEAM RAIL E2

SLOTTED THRIE BEAM RAIL E3

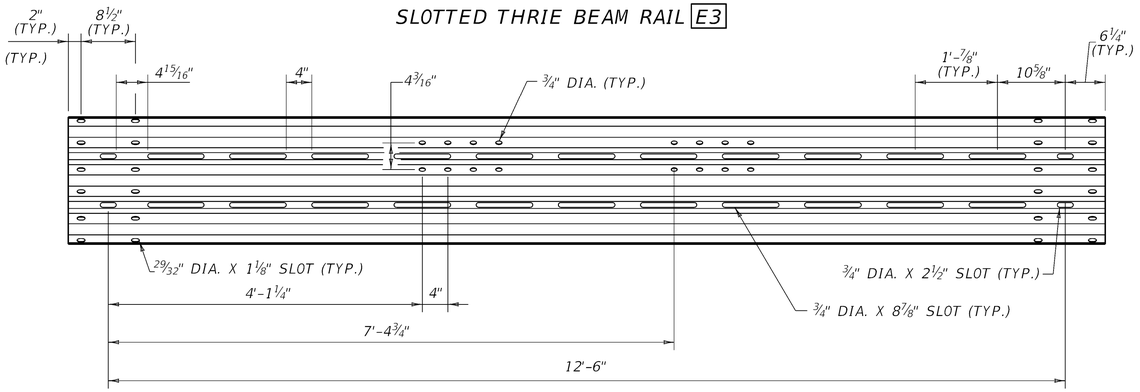

ELEVATION VIEW NON-RADIUSED

SLOTTED THRIE BEAM RAIL E4

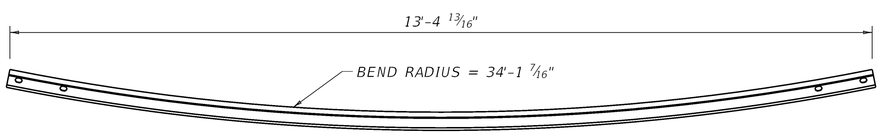

PLAN VIEW

SLOTTED THRIE BEAM RAIL E4

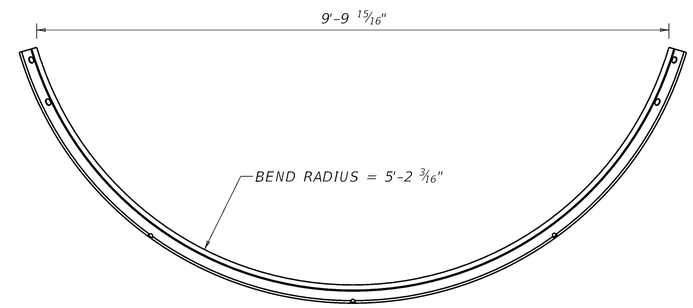

PLAN VIEW

SLOTTED THRIE BEAM RAIL E2

~ NOTES ~

801 FOR THRIE BEAM RAIL, USE AASHTO M180, SPEC 814, AND GUARDRAIL MANUFACTURER FROM KYTC'S LIST.

802 MARK THE RADIUS OF CURVATURE ON EACH OF THE CURVED ELEMENTS.

803 IN AN ASYMMETRICAL BULLNOSE, THE OPPOSING-SIDE E4 THRIE-BEAM IS STRAIGHT, NOT CURVED. THIS TANGENT BEAM HAS A LENGTH OF 13' - 6 ½".

REVISION DATE: 12.10.2024
REVISION NUMBER: 0

SUBMITTED ____ DIVISION DIRECTOR ____ DATE

APPROVED ____ STATE HIGHWAY ENGINEER ____ DATE

BARRIERS

COMMONWEALTH OF KENTUCKY
DEPARTMENT OF HIGHWAYS
TEAM KENTUCKY TRANSPORTATION CABINET

STEEL THRIE BEAM BULLNOSE TERMINAL

SHEET 008: SLOTTED THRIE BEAM RAIL

SEPIA NUMBER
SEPIA 095

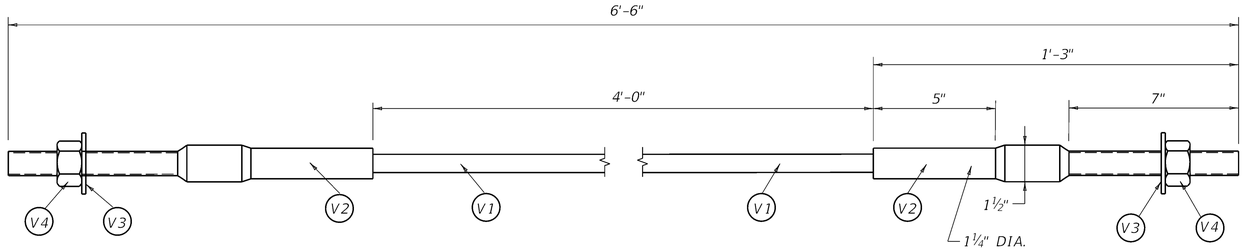

ANCHOR CABLE ASSEMBLY

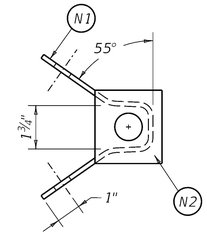

PROFILE VIEW

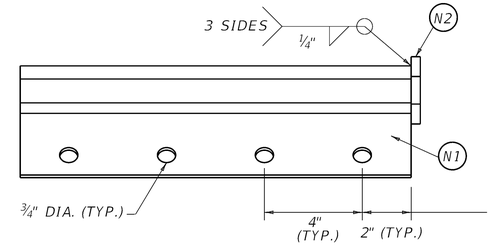

PLAN VIEW

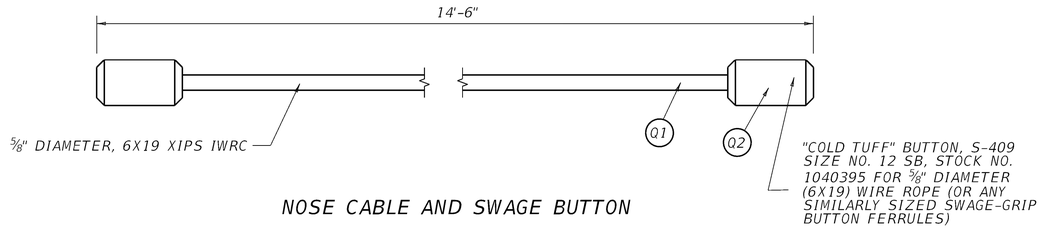

NOSE CABLE AND SWAGE BUTTON

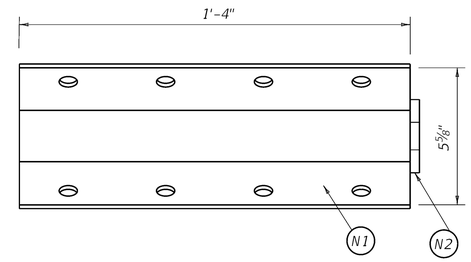

ELEVATION VIEW

ANCHOR BRACKET ASSEMBLY (N1)

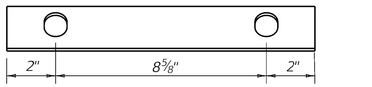

PLAN VIEW

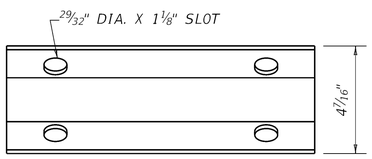

ELEVATION VIEW

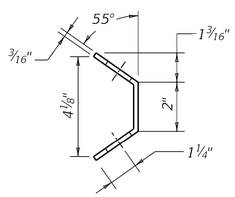

PROFILE VIEW

NOSE CABLE ANCHOR (R1)

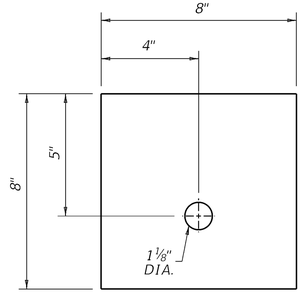

ELEVATION VIEW

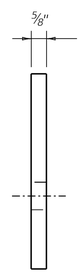

PROFILE VIEW

BCT BEARING PLATE (A3)

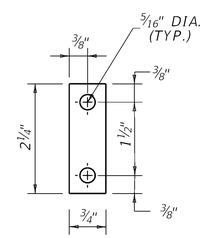

ELEVATION VIEW

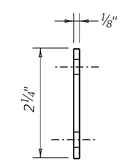

PROFILE VIEW

U - BOLT
PLATE WASHER (T2)

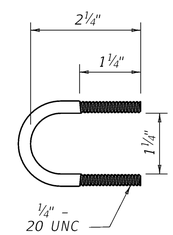

U - BOLT
(T1)

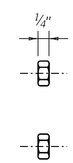

U - BOLT
NUT (T3)

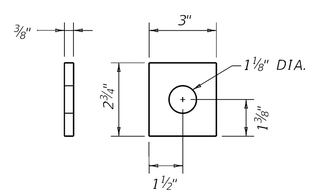

ANCHOR BRACKET
END PLATE (N2)

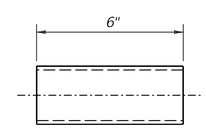

ELEVATION VIEW

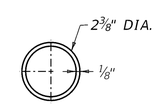

PROFILE VIEW

BCT POST SLEEVE (L2)

~ NOTES ~

900 SEE SHEET 10 FOR PART DESCRIPTIONS.

REVISION DATE: 12.10.2024
REVISION NUMBER: 0

SUBMITTED ____ DIVISION DIRECTOR ____ DATE

APPROVED ____ STATE HIGHWAY ENGINEER ____ DATE

BARRIERS

COMMONWEALTH OF KENTUCKY
DEPARTMENT OF HIGHWAYS

TEAM KENTUCKY TRANSPORTATION CABINET

STEEL THRIE BEAM BULLNOSE TERMINAL

SHEET 009: ASSEMBLY DETAILS

SEPIA NUMBER
SEPIA 095

THRIE BEAM BULLNOSE TERMINAL MATERIALS LIST

PART NUMBER	QUANTITY	DESCRIPTION	MATERIAL SPECIFICATION
A1	2	LONG FOUNDATION TUBE	AASHTO M111/ASTM A123 ASTM A500 GRADE B OR ASTM A-501
A2	2	FOUNDATION TUBE	AASHTO M111/ASTM A123 ASTM A500 GRADE B OR ASTM A-501
A3	2	BEARING PLATE AT POST	AASHTO M111/ASTM A123 ASTM A36 MIN STRENGTH 36 KSI, OR ASTM A529 MAX. STRENGTH 50 KSI, OR ASTM A572 MAX. STRENGTH 50 KSI, OR ASTM A709 MAX. STRENGTH 50 KSI, OR ASTM A992 MAX. STRENGTH 50 KSI
B1	12	LOWER SHEAR PLATE	AASHTO M111/ASTM A123 ASTM A36 MIN STRENGTH 36 KSI, OR ASTM A529 MAX. STRENGTH 50 KSI, OR ASTM A572 MAX. STRENGTH 50 KSI, OR ASTM A709 MAX. STRENGTH 50 KSI, OR ASTM A992 MAX. STRENGTH 50 KSI
B2	12	FOUNDATION TUBE	AASHTO M111/ASTM A123 ASTM A500 GRADE B OR ASTM A-501
C1	12	UPPER SHEAR PLATE	AASHTO M111/ASTM A123 ASTM A36 MIN STRENGTH 36 KSI, OR ASTM A529 MAX. STRENGTH 50 KSI, OR ASTM A572 MAX. STRENGTH 50 KSI, OR ASTM A709 MAX. STRENGTH 50 KSI, OR ASTM A992 MAX. STRENGTH 50 KSI
C2	12	STEEL POST	AASHTO M111/ASTM A123 ASTM A6 W6X9 OR W6X8.5 ASTM A36 MIN STRENGTH 36 KSI, OR ASTM A529 MAX. STRENGTH 50 KSI, OR ASTM A572 MAX. STRENGTH 50 KSI, OR ASTM A709 MAX. STRENGTH 50 KSI, OR ASTM A992 MAX. STRENGTH 50 KSI
D1	20	BLOCK FOR STEEL POST - WOOD	KYTC SPEC. 814
D2	12	TAPERED BLOCK FOR STEEL POST - WOOD	KYTC SPEC. 814
D3	2	TAPERED BLOCK FOR BCT POST - WOOD	KYTC SPEC. 814
E1	4	THRIE BEAM RAIL	AASHTO M180, SPEC 814, AND A GUARDRAIL MANUFACTURER FROM KYTC'S LIST OF APPROVED MATERIALS.
E2	1	THRIE BEAM RAIL - SHOP BENT AND PUNCHED	AASHTO M180, SPEC 814, AND A GUARDRAIL MANUFACTURER FROM KYTC'S LIST OF APPROVED MATERIALS. CURVE GUARDRAIL IN SHOP. MARK THE RADIUS OF CURVATURE ON EACH OF THE CURVED ELEMENTS.
E3	2	THRIE BEAM RAIL - PUNCHED	AASHTO M180, SPEC 814, AND A GUARDRAIL MANUFACTURER FROM KYTC'S LIST OF APPROVED MATERIALS.
E4	2	THRIE BEAM RAIL - SHOP BENT AND PUNCHED	AASHTO M180, SPEC 814, AND A GUARDRAIL MANUFACTURER FROM KYTC'S LIST OF APPROVED MATERIALS. CURVE GUARDRAIL IN SHOP. MARK THE RADIUS OF CURVATURE ON EACH OF THE CURVED ELEMENTS. NOTE: IN AN ASYMMETRICAL BULLNOSE, THE OPPOSING TRAFFIC SIDE E4 THRIE-BEAM IS STRAIGHT, NOT CURVED. THIS TANGENT BEAM HAS A LENGTH OF 13' 6 1/2".
F1	4	5/8" DIA. HEX HEAD GROUND STRUT AND YOKE BOLT 11 UNC, 10" LONG BOLT	HOT DIP AASHTO M232 CLASS / ASTM A153 CLASS C / ASTM F2329 C OR MECHANICAL GAL. TO AASHTO M298 CLASS 50 TYPE 1/ ASTM B695 CLASS 50 TYPE 1 UNC HEAVY HEX HEAD ASTM A307 GRADE B OR SAE J429 GRADE 2 OR ASTM F1554 GRADE 36
F2	8	5/8" DIA. GROUND STRUT AND YOKE BOLT - WASHER 1 3/4" OUTSIDE DIAMETER, 11/16" INSIDE DIAMETER WASHER. 1/8" THICK	HOT DIP AASHTO M232 CLASS / ASTM A153 CLASS C / ASTM F2329 C OR MECHANICAL GAL. TO AASHTO M298 CLASS 50 TYPE 1/ ASTM B695 CLASS 50 TYPE 1 F436 TYPE 1 (HARDEN WASHER ONLY)
F3	4	GROUND STRUT AND YOKE BOLT - NUT 9/16" THICK	HOT DIP AASHTO M232 CLASS / ASTM A153 CLASS C / ASTM F2329 C OR MECHANICAL GAL. TO AASHTO M298 CLASS 50 TYPE 1/ ASTM B695 CLASS 50 TYPE 1 UNC OVER TAP NUTS AS SPECIFIED IN AASHTO 291/ASTM A 563 HEAVY HEX HEAD ASTM A563DH OR SAE J995 GRADE 5
G1a	14	5/8 " DIA. POST BOLT - 18" LONG	HOT DIP AASHTO M232 CLASS / ASTM A153 CLASS C / ASTM F2329 C OR MECHANICAL GAL. TO AASHTO M298 CLASS 50 TYPE 1/ ASTM B695 CLASS 50 TYPE 1 F436 TYPE 1 (HARDEN WASHER TYPICALLY USED WITH STEEL POSTS) OR ASTM F844 (UNHARDENED WASHER TYPICALLY USED WITH WOOD)
G1b	12	5/8 " DIA. POST BOLT - 10" LONG	HOT DIP AASHTO M232 CLASS / ASTM A153 CLASS C / ASTM F2329 C OR MECHANICAL GAL. TO AASHTO M298 CLASS 50 TYPE 1/ ASTM B695 CLASS 50 TYPE 1 F436 TYPE 1 (HARDEN WASHER TYPICALLY USED WITH STEEL POSTS) OR ASTM F844 (UNHARDENED WASHER TYPICALLY USED WITH WOOD)
G2	6	POST BOLT - WASHER 1 3/4" OUTSIDE DIAMETER, 11/16" INSIDE DIAMETER WASHER. 1/8" THICK	HOT DIP AASHTO M232 CLASS / ASTM A153 CLASS C / ASTM F2329 C OR MECHANICAL GAL. TO AASHTO M298 CLASS 50 TYPE 1/ ASTM B695 CLASS 50 TYPE 1 F436 TYPE 1 (HARDEN WASHER TYPICALLY USED WITH STEEL POSTS) OR ASTM F844 (UNHARDENED WASHER TYPICALLY USED WITH WOOD)
G3	26	POST BOLT - NUT 5/8", 9/16" THICK	HOT DIP AASHTO M232 CLASS / ASTM A153 CLASS C / ASTM F2329 C OR MECHANICAL GAL. TO AASHTO M298 CLASS 50 TYPE 1/ ASTM B695 CLASS 50 TYPE 1 UNC OVER TAP NUTS AS SPECIFIED IN AASHTO 291/ASTM A 563 AASHTO M180 RECESSED HEAVY HEX HEAD ASTM A563DH OR SAE J995 GRADE 5
H1	4	7/8" DIA. SOIL TUBE BOLT 9 UNC, 8" LONG	HOT DIP AASHTO M232 CLASS / ASTM A153 CLASS C / ASTM F2329 C OR MECHANICAL GAL. TO AASHTO M298 CLASS 50 TYPE 1/ ASTM B695 CLASS 50 TYPE 1 UNC OVER TAP NUTS AS SPECIFIED IN AASHTO 291/ASTM A 563 HEAVY HEX HEAD 7/8" ASTM A563DH OR SAE J995 GRADE 5
H2	8	SOIL TUBE BOLT - WASHER 2 1/4" OUTSIDE DIAMETER, 15/16" INSIDE DIAMETER WASHER. 3/16" THICK	HOT DIP AASHTO M232 CLASS / ASTM A153 CLASS C / ASTM F2329 C OR MECHANICAL GAL. TO AASHTO M298 CLASS 50 TYPE 1/ ASTM B695 CLASS 50 TYPE 1 7/8" ASTM F844 TYPE 1 (HARDEN WASHER ONLY)
H3	4	SOIL TUBE BOLT - NUT 3/4" THICK	HOT DIP AASHTO M232 CLASS / ASTM A153 CLASS C / ASTM F2329 C OR MECHANICAL GAL. TO AASHTO M298 CLASS 50 TYPE 1/ ASTM B695 CLASS 50 TYPE 1 UNC OVER TAP NUTS AS SPECIFIED IN AASHTO 291/ASTM A 563 HEAVY HEX HEAD 7/8" ASTM A563DH OR SAE J995 GRADE 5
J1	38	16D DOUBLE HEAD NAIL	ASTM A153 HOT DIPPED CLASS D DOUBLE HEAD ASTM F1667 TYPE 1 STYLE 12 (16 DOUBLE HEADED)
L1	4	BCT TIMBER POST	KYTC SPEC. 814, S4S FINISH ON 4 SIDE
L2	2	BCT POST SLEEVE	AASHTO M111/ASTM A123 2 3/8" OD ASTM 53 GRADE B
M1	8	W6X8.5 OR W6X9 STEEL POST	AASHTO M111/ASTM A123 ASTM A6 W6X9 OR W6X8.5 ASTM A36 MIN. STRENGTH 36 KSI, OR ASTM A529 MAX. STRENGTH 50 KSI, OR ASTM A572 MAX. STRENGTH 50 KSI, OR ASTM A709 MAX. STRENGTH 50 KSI, OR ASTM A992 MAX. STRENGTH 50 KSI
N1	2	ANCHOR BRACKET	AASHTO M111/ASTM A123 ASTM A36 MIN. STRENGTH 36 KSI, OR ASTM A529 MAX. STRENGTH 50 KSI, OR ASTM A572 MAX. STRENGTH 50 KSI, OR ASTM A709 MAX. STRENGTH 50 KSI, OR ASTM A992 MAX. STRENGTH 50 KSI
N2	2	ANCHOR BRACKET - BEARING PLATE	AASHTO M111/ASTM A123 ASTM A36 MIN. STRENGTH 36 KSI, OR ASTM A529 MAX. STRENGTH 50 KSI, OR ASTM A572 MAX. STRENGTH 50 KSI, OR ASTM A709 MAX. STRENGTH 50 KSI, OR ASTM A992 MAX. STRENGTH 50 KSI

PART NUMBER	QUANTITY	DESCRIPTION	MATERIAL SPECIFICATION
P1	16	5/8" DIA. ANCHOR BRACKET BOLT 1 1/2" LONG, 5/8" DIAMETER - 14 UNC	HOT DIP AASHTO M232 CLASS / ASTM A153 CLASS C / ASTM F2329 C OR MECHANICAL GAL. TO AASHTO M298 CLASS 50 TYPE 1/ ASTM B695 CLASS 50 TYPE 1 UNC HEAVY HEX HEAD 5/8" ASTM A307 GRADE B OR SAE J429 GRADE 2 OR ASTM F1554 GRADE 36
P2	32	ANCHOR BRACKET BOLT - WASHER 1/8" THICK, 1 3/4" OUTSIDE DIAMETER, 11/16" INSIDE DIAMETER	HOT DIP AASHTO M232 CLASS / ASTM A153 CLASS C / ASTM F2329 C OR MECHANICAL GAL. TO AASHTO M298 CLASS 50 TYPE 1/ ASTM B695 CLASS 50 TYPE 1 F436 TYPE 1 (HARDEN WASHER ONLY)
P3	16	ANCHOR BRACKET BOLT - NUT, 9/16" THICK	HOT DIP AASHTO M232 CLASS / ASTM A153 CLASS C / ASTM F2329 C OR MECHANICAL GAL. TO AASHTO M298 CLASS 50 TYPE 1/ ASTM B695 CLASS 50 TYPE 1 UNC OVER TAP NUTS AS SPECIFIED IN AASHTO 291/ASTM A 563 HEAVY HEX HEAD ASTM A563DH OR SAE J995 GRADE 5
Q1	3	5/8" DIA. NOSE CABLE 6X9 XIPS IWRC	6X19 AASTHO M30 / ASTM A741 XIPS INDEPENDENT WIRE CORE (IWRC) PR 6X25 XIPS, IWRC NOMINAL BREAKING STRENGTH OF 41.2 KIPS.
Q2	6	NOSE CABLE-SWAGE BUTTON	COLD TUFF BUTTON, S-409 SIZE NO. 12 SB STOCK NUMBER 1040395 FOR 5/8 IN. DIAMETER OR ANY OTHER SIMILAR SIZED WAGED-GRIP-BUTTON FERRULES. ASTM A576 GRADE 1035 SWAGE FITTING ARE TO BE FIELD SWAGED PER MANUFACTURERS RECOMMENDATION. NOMINAL BREAKING STRENGTH OF 41.2 KIPS.
R1	6	NOSE CABLE ANCHOR BRACKET	AASHTO M111/ASTM A123 ASTM A36 MIN. STRENGTH 36 KSI, OR ASTM A529 MAX. STRENGTH 50 KSI, OR ASTM A572 MAX. STRENGTH 50 KSI, OR ASTM A709 MAX. STRENGTH 50 KSI, OR ASTM A992 MAX. STRENGTH 50 KSI
S1	120	5/8" DIA. SPLICE BOLT - BOLT 11 UNC, 1 1/4" LONG	HOT DIP AASHTO M232 CLASS / ASTM A153 CLASS C / ASTM F2329 C OR MECHANICAL GAL. TO AASHTO M298 CLASS 50 TYPE 1 / ASTM B695 CLASS 50 TYPE 1 UNC AASHTO M180 HEAD ASTM A307 GRADE B OR SAE J429 GRADE 2 OR ASTM F1554 GRADE 36
S2	120	SPLICE - BOLT NUT 9/16" THICK	HOT DIP AASHTO M232 CLASS / ASTM A153 CLASS C / ASTM F2329 C OR MECHANICAL GAL. TO AASHTO M298 CLASS 50 TYPE 1 / ASTM B695 CLASS 50 TYPE 1 UNC OVER TAP NUTS AS SPECIFIED IN AASHTO 291/ASTM A 563 AASHTO M180 RECESSED HEAVY HEX HEAD 5/8" ASTM A563DH OR SAE J995 GRADE 5
T1	9	1/4" DIA. NOSE CABLE - U BOLT	HOT DIP AASHTO M232 CLASS / ASTM A153 CLASS C / ASTM F2329 C OR MECHANICAL GAL. TO AASHTO M298 CLASS 50 TYPE 1 / ASTM B695 CLASS 50 TYPE 1 UNC HEAVY HEX HEAD ASTM A307 GRADE B OR SAE J429 GRADE 2 OR ASTM F1554 GRADE 36
T2	9	U-BOLT - PLATE WASHER	HOT DIP AASHTO M232 CLASS / ASTM A153 CLASS C / ASTM F2329 C OR MECHANICAL GAL. TO AASHTO M298 CLASS 50 TYPE 1 / ASTM B695 CLASS 50 TYPE 1 F436 TYPE 1 (HARDEN WASHER ONLY)
T3	18	U-BOLT NUT	HOT DIP AASHTO M232 CLASS / ASTM A153 CLASS C / ASTM F2329 C OR MECHANICAL GAL. TO AASHTO M298 CLASS 50 TYPE 1/ ASTM B695 CLASS 50 TYPE 1 UNC OVER TAP NUTS AS SPECIFIED IN AASHTO 291 / ASTM A 563 HEAVY HEX HEAD ASTM A563DH OR SAE J995 GRADE 5
U1	48	7/16" DIA. SLIP POST ASSEMBLY - BREAKAWAY BOLT 2 1/2", 7/16" DIAMETER - 14 UNC	ASTM A153 OR B695 CLASS 55 OR F2329 UNC FULLY THREADED HEX HEAD TAP BOLT ASTM A449 OR SAE J429 GRADE 5
U2	192	7/16" DIA. SLIP POST ASSEBLY - BREAKAWAY BOLT - WASHER 1 1/4" OUTSIDE DIAMETER, 1/2" INSIDE DIAMETER	ASTM F436 TYPE I (HARDEN TYPICALLY USED WITH STEEL) GALV. AASHTO M111/ASTM A 123 OR GALV. HOT DIP. TO POST BOLT CLASS C / ASTM F2329 OR GALV. MECHANICALLY TO AASHTO M232 CLASS C / ASTM A153 CLASS C / ASTM AASHTO M298 CLASS 50, TYPE 1 / ASTM B695 CLASS 55, F2329
U3	48	SLIP POST ASSEBLY - BREAKAWAY BOLT - NUT	HOT DIP AASHTO M232 CLASS / ASTM A153 CLASS C / ASTM F2329 C OR MECHANICAL GAL. TO AASHTO M298 CLASS 50 TYPE 1 / STM B695 CLASS 50 TYPE 1 UNC OVER TAP NUTS AS SPECIFIED IN AASHTO 291/ASTM A 563 HEAVY HEX HEAD ASTM A563DH OR SAE J995 GRADE 5
V1	2	3/4" DIA. BCT CABLE	AASHTO M30 / ASTM A741 6X19 INDEPENDENT WIRE CORE (IWRC) IMPROVED PLOW STEEL (IPS), 6X19 INDEPENDENT WIRE CORE (IWRC) IMPROVED PLOW STEEL (IPS) TYPE II OR IIC, CLASS C ZINC COATED MIN BREAKING STRENGTH OF 42.7 KIPS
V2	4	ANCHOR CABLE-SWAGE FITTING, 1 1/4" DIAMETER	UNC ASTM A576 GRADE 1035 SWAGE FITTING ARE TO BE FACTORY SWAGED. MIN. BREAKING STRENGTH OF 42.7 KIPS. ASME B30.26 "FORGED, CAST, OR DIE STAMPED WITH THE FOLLOWING IN TO CONNECTION: NAME OF MANUFACTURE OR TRADEMARK OF CONNECTION'S MANUFACTURER, SIZE OR RATED LOAD, GRADE FOR ALLOY EYEBOLTS."
V3	4	1" DIA. ANCHOR CABLE-WASHER	HOT DIP AASHTO M232 CLASS / ASTM A153 CLASS C / ASTM F2329 C OR MECHANICAL GAL. TO AASHTO M298 CLASS 50 TYPE 1 / ASTM B695 CLASS 50 TYPE 1 F436 TYPE 1 (HARDEN WASHER ONLY)
V4	4	1" DIA. ANCHOR CABLE-NUT	HOT DIP AASHTO M232 CLASS / ASTM A153 CLASS C / ASTM F2329 C OR MECHANICAL GAL. TO AASHTO M298 CLASS 50 TYPE 1/ ASTM B695 CLASS 50 TYPE 1 UNC OVER TAP NUTS AS SPECIFIED IN AASHTO 291 / ASTM A 563 HEAVY HEX HEAD ASTM A563DH OR SAE J995 GRADE 5
W1	3	REFLECTOR	SEE SPEC 838, AND KYTC'S LIST OF APPROVED MATERIALS.

REVISION DATE: 12.10.2024
REVISION NUMBER: 0

SUBMITTED _____ DIVISION DIRECTOR _____ DATE

APPROVED _____ STATE HIGHWAY ENGINEER _____ DATE

BARRIERS